EXPLODED VIEW

Model H100 - H400

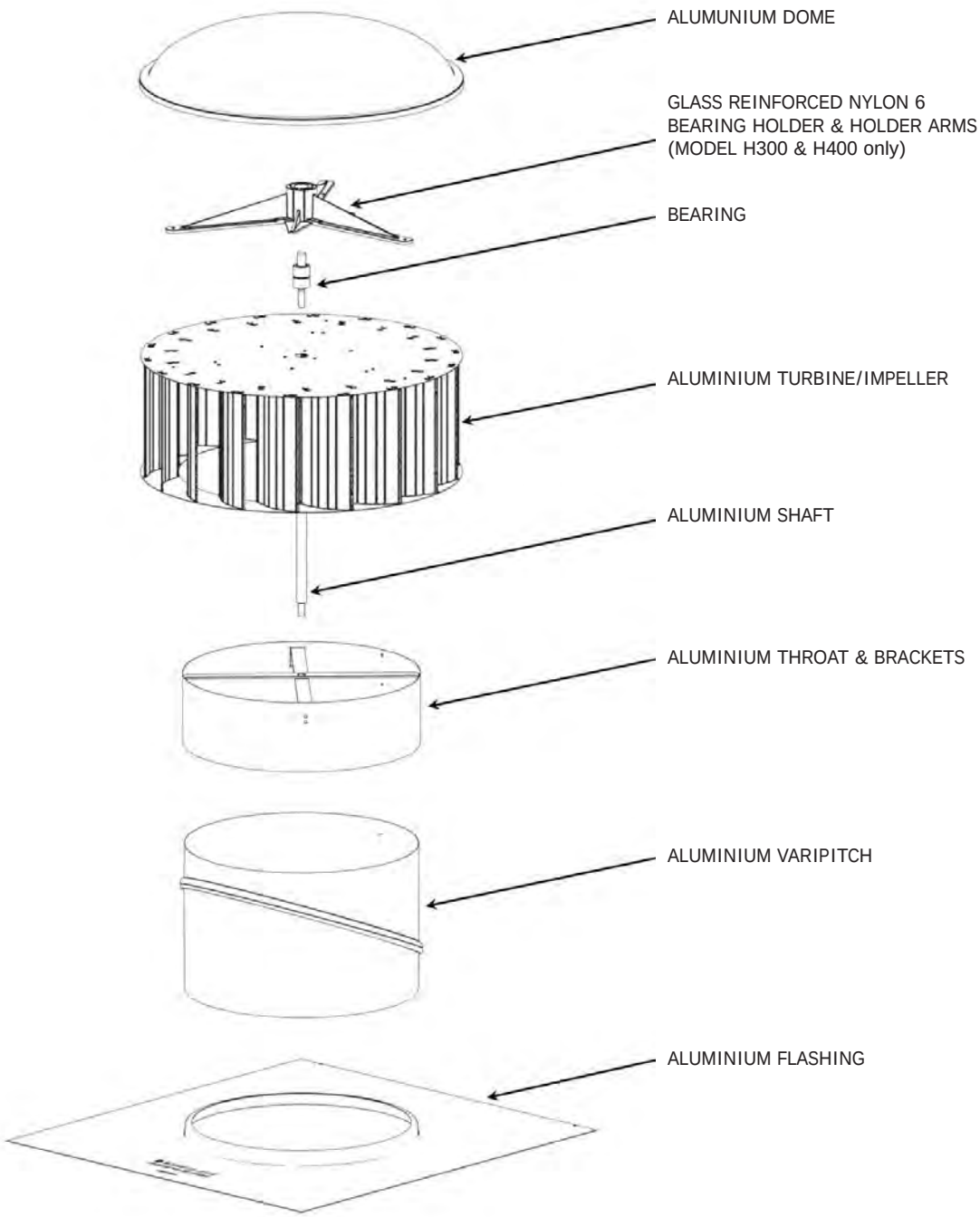

PRODUCT DIMENSION & WEIGHT

Model H100 - H400

Turbine, Varipitch and Flashing[1]

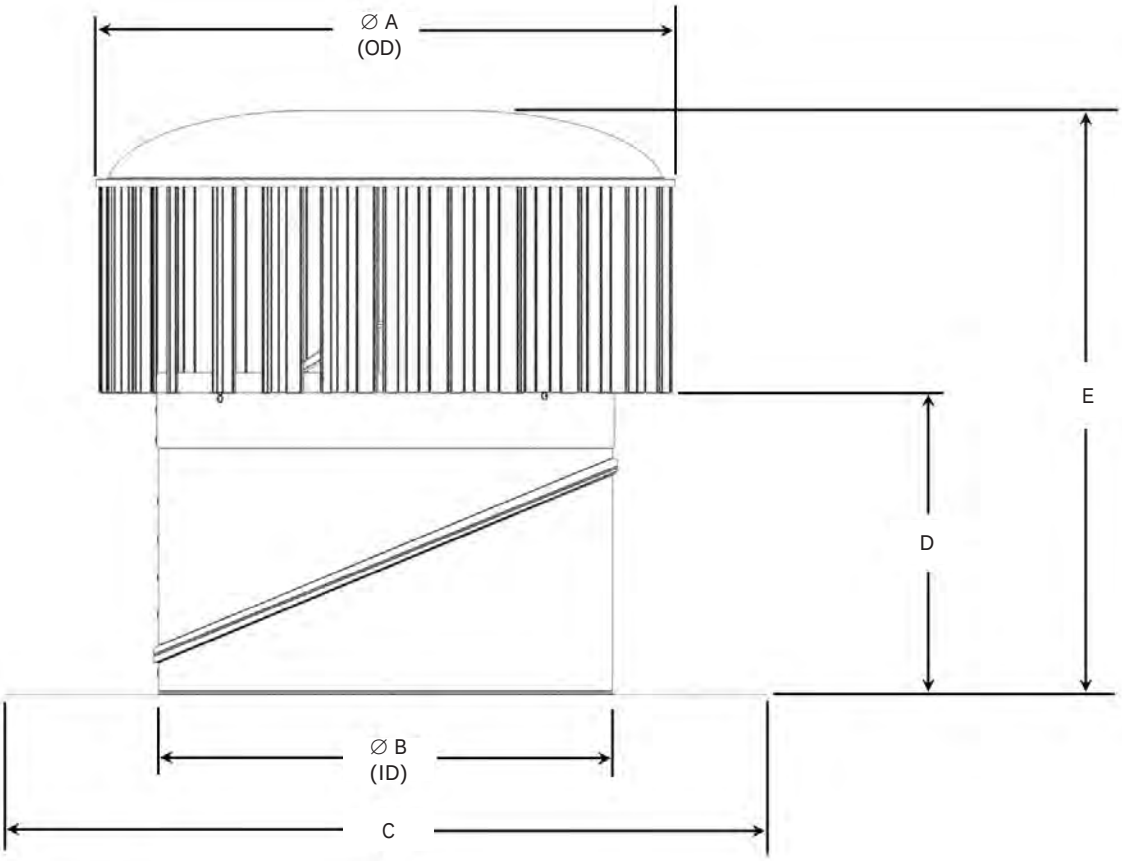

A : Overall turbine diameter B : Internal diameter of flashing opening C: Flashing Overall
D : Clearance flashing to turbine E : Overall Height

In Metric Units

Model	Dimensions*(mm)					Weight	Roof Slope Range
	∅A	∅B	C	D	E	kg	
H100	290	98.6	430 x 430	139	313	1.80	0° - 45°
H150	332	145.6	430 x 430	164	363	2.40	0° - 45°
H300	477	298	600 x 500	225	480	4.90	0° - 45°
H400	561	401	750 x 700	274	564	6.30	0° - 45°

* Tolerance is within +/- 5mm and +/- 0.5kgs

In Imperal Units

Model	Dimensions#(inches)					Weight	Roof Slop Range
	∅A	∅B	C	D	E	lb	
H100	11.4	3.88	16.9 x 16.9	5.5	12.3	3.97	0° - 45°
H150	13.1	5.73	16.9 x 16.9	6.5	14.3	5.29	0° - 45°
H300	18.8	11.73	23.6 x 19.7	8.9	18.9	10.80	0° - 45°
H400	22.1	15.78	29.5 x 27.6	10.8	22.2	13.89	0° - 45°

Tolerance is within +/- 0.2 inches and +/- 1.1lbs

[1] The Hurricane throat overlaps the Varipitch. The height listed above is with the maximum overlap (lowest overall height). Revolving the Varipitch to suit a roof slope also reduces the complete ventilator's overall height.

PRODUCT DIMENSION & WEIGHT

Model H100 - H400

Turbine

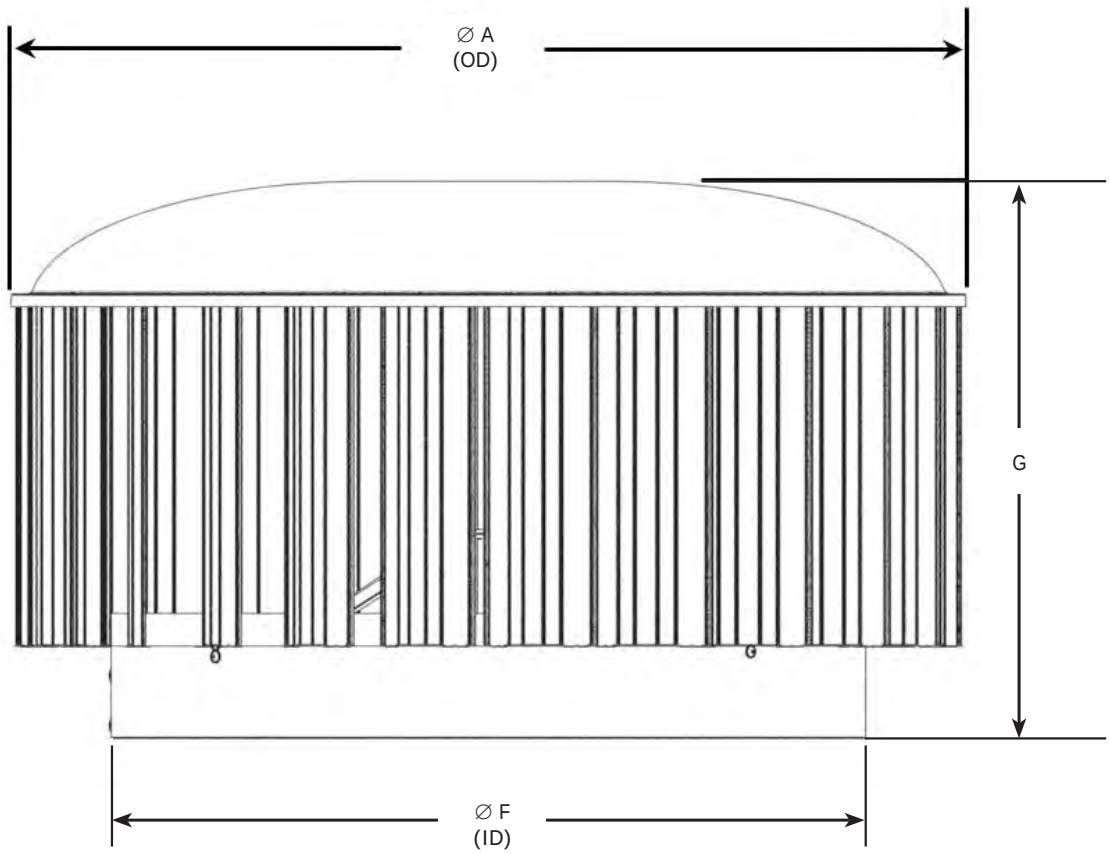

A : Overall turbine diameter F : Effective inner throat opening area G: Overall turbine only height

In Metric Units

Model	Dimensions* (mm)			Weight
	ØA	ØF	G	kg
H100	290	107	253	1.30
H150	332	155	283	1.90
H300	477	308	364	3.70
H400	561	410	389	4.50

* Tolerance is within +/- 5mm and +/- 0.5kgs

In Imperal Units

Model	Dimensions# (inches)			Weight
	ØA	ØF	G	lb
H100	11.4	4.2	10.0	2.87
H150	13.1	6.1	11.1	4.19
H300	18.8	12.1	14.3	8.16
H400	22.1	16.1	15.3	9.92

Tolerance is within +/- 0.2 inches and +/- 1.1lbs

PRODUCT CLASSIFICATION AND PERFORMANCE

Model H100 - H400

PRODUCT INFORMATION SUMMARY

Ventilator Range	Hurricane®			
Ventilator Model	H100	H150	H300	H400
Ventilator Type (AS/NZS 4740:2000 cl 1.5)	Type 4 - Rotating wind-driven roof ventilator			
Ventilator Performance Class (AS/NZS 4740:2000 Table 1.2)				
Rain Resistance	50 m/s No Water - Class A	50 m/s No Water - Class A	50 m/s No Water - Class A	50 m/s No Water - Class A
Effective Aerodynamic Area, EAA	0.004 m^2	0.011 m^2	0.044 m^2	0.078 m^2
Effective Aerodynamic Area, C_d	0.6 - Class 2	0.67 - Class 2	0.71 - Class 1	0.7 - Class 1
Flow Coefficient, C_f	0.26 - Class 4	0.28 - Class 4	0.31 - Class 3	0.24 - Class 4
Wind Loading	57m/s - Level 1	57m/s - Level 1	57m/s - Level 1	57m/s - Level 1
Nominal Performance* (m^3/hr)				
0 m/s	31 m^3/hr	97 m^3/hr	376 m^3/hr	669 m^3/hr
3 m/s	32 m^3/hr	103 m^3/hr	404 m^3/hr	699 m^3/hr
6 m/s	37 m^3/hr	119 m^3/hr	478 m^3/hr	783 m^3/hr

*In accordance to AS/NZS 4740:2000 nominal performance parameters, as per cl3.5 at h = 6m, $\Delta T = 14^oC$, $T = 20^o$

PERFORMANCE

Natural wind ventilators must be manufactured in Australia and in an ISO 9001 certified factory. They must:

- Be tested in accordance to the Australian and New Zealand standard AS/NZS 4740:2000 Performance of Natural Ventilation.
- Have the tested capability of withstanding wind speed of 205.2km/hr.

FINISHES

Available in a mill or a range of powder coat colours upon request

ACCESSORIES

When specified, accessories such as manual damper, electric damper, EC damper grilles, and special bases (spigot, square to round and EX Base) are available upon request.

WARRANTIES

CSR Building Products Limited ABN 55 008 631 356 T/A Edmonds ("Edmonds") warrants from the date of install, for a period of FIFTEEN (15) YEARS that the Edmonds Hurricane® Natural Ventilator turbine and body will retain its performance characteristics and be free from faulty materials and workmanship on the condition that the vent is installed in accordance to the installation instructions. Please refer to Warranty Document on edmonds.com.au for full details.

EXPLODED VIEW

Model H450 - H600

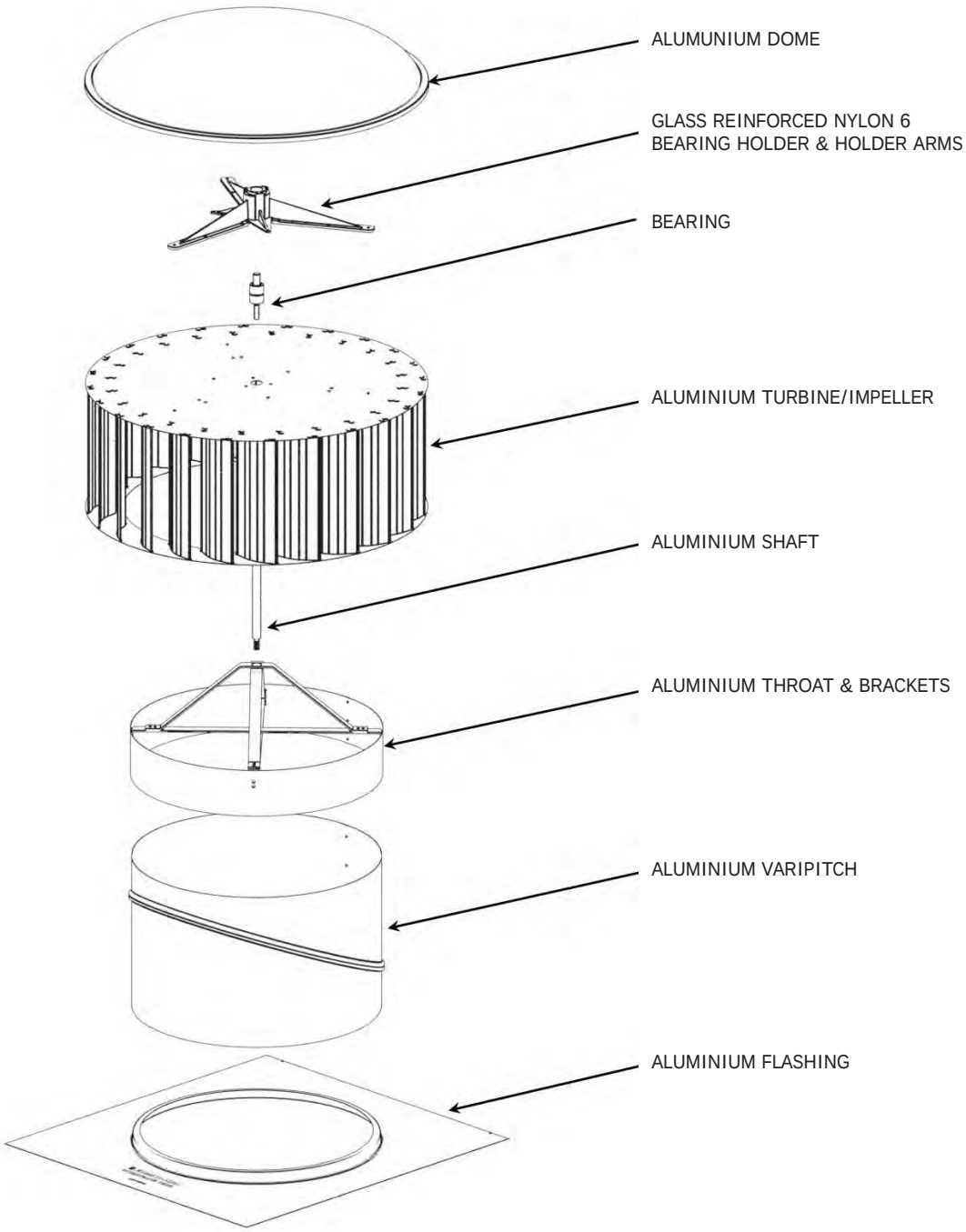

PRODUCT DIMENSION & WEIGHT

Model H450 - H600

Turbine, Varipitch and Flashing[1]

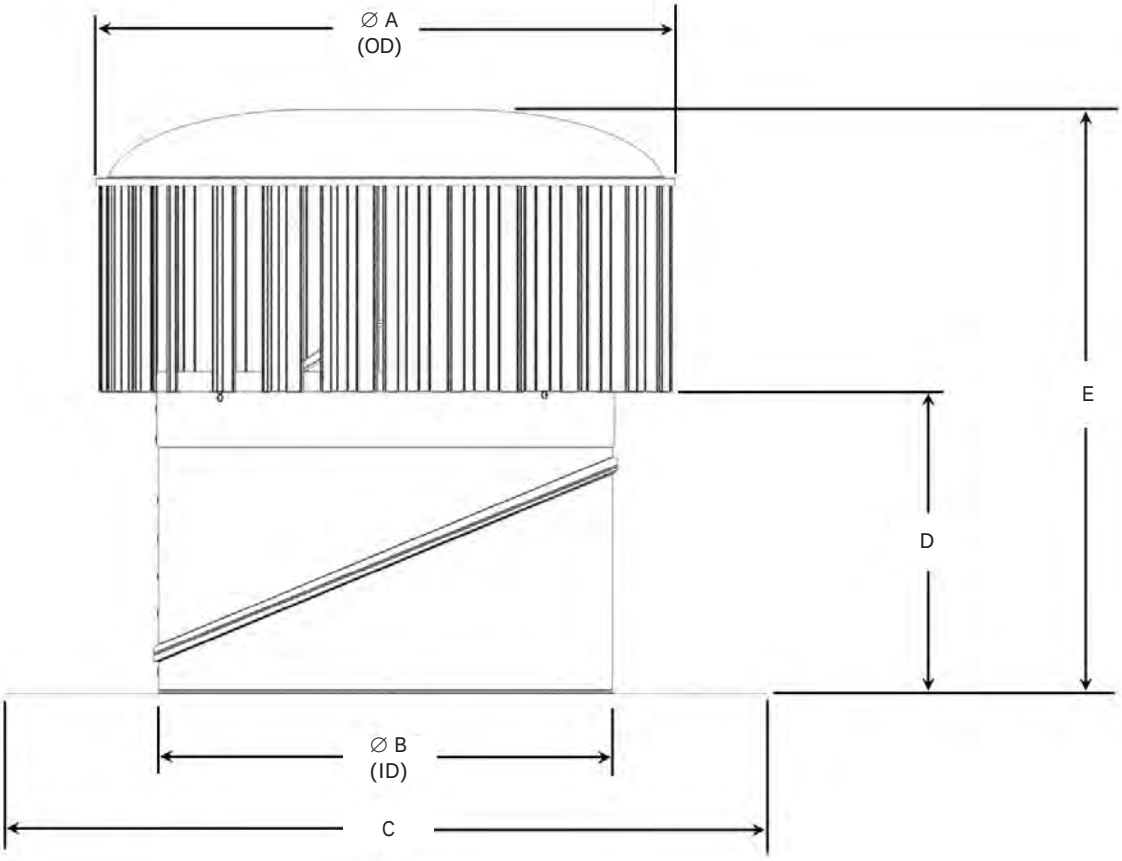

A : Overall turbine diameter B : Internal diameter of flashing opening C: Flashing Overall
D : Clearance flashing to turbine E : Overall Height

In Metric Units

Model	Dimensions*(mm)					Weight	Roof Slope Range
	∅A	∅B	C	D	E	kg	
H450	648	452	750 x 700	319	634	8.10	0° - 45°
H500	702	502	750 x 700	345	700	9.20	0° - 45°
H600	766	592	1000 x 1000	359	724	11.80	0° - 45°

* Tolerance is within +/- 5mm and +/- 0.5kgs

In Imperal Units

Model	Dimensions#(inches)					Weight	Roof Slop Range
	∅A	∅B	C	D	E	lb	
H450	25.5	17.80	29.5 x 27.7	12.6	25.0	17.86	0° - 45°
H500	27.6	19.77	29.5 x 27.8	13.6	27.6	20.28	0° - 45°
H600	30.2	23.30	39.4 x 39.4	14.1	28.5	26.01	0° - 45°

Tolerance is within +/- 0.2 inches and +/- 1.1lbs

[1] The Hurricane throat overlaps the Varipitch. The height listed above is with the maximum overlap (lowest overall height). Revolving the Varipitch to suit a roof slope also reduces the complete ventilator's overall height.

National Export Award for Edmonds Business

Quality Management standard for Edmonds Seven Hills facility

CONFIGURABLE PRODUCT | WATER INGRESS PROTECTED | SUITABLE FOR HIGH WINDSPEED | DESIGNED

PRODUCT DIMENSION & WEIGHT

Model H450 - H600

Turbine

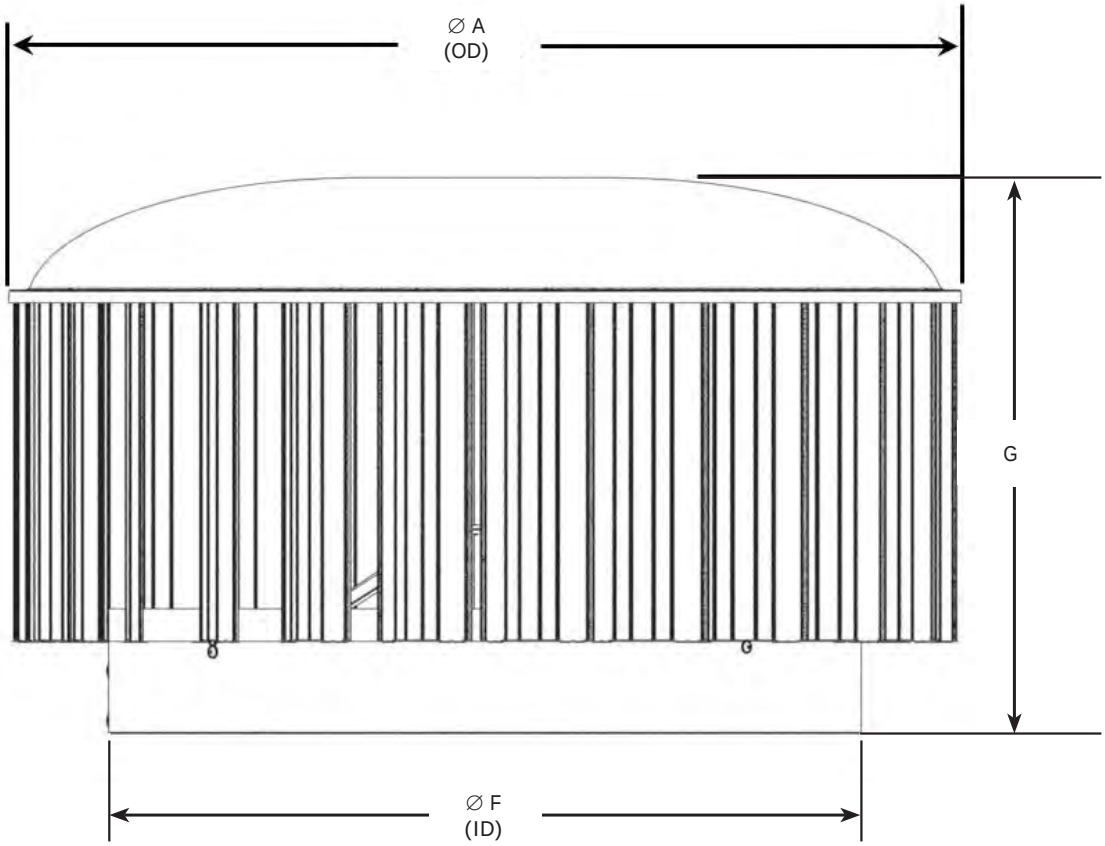

A : Overall turbine diameter F : Effective inner throat opening area G: Overall turbine only height

In Metric Units

Model	Dimensions* (mm)			Weight
	ØA	ØF	G	kg
H450	648	462	443	6.20
H500	702	511	459	6.90
H600	766	602	484	8.10

* Tolerance is within +/- 5mm and +/- 0.5kgs

In Imperal Units

Model	Dimensions# (inches)			Weight
	ØA	ØF	G	lb
H450	25.5	18.2	17.4	13.67
H500	27.6	20.1	18.1	15.21
H600	30.2	23.7	19.1	17.86

Tolerance is within +/- 0.2 inches and +/- 1.1lbs

PRODUCT CLASSIFICATION AND PERFORMANCE

Model H450 - H600

PRODUCT INFORMATION SUMMARY

Ventilator Range	Hurricane®		
Ventilator Model	H450	H500	H600
Ventilator Type	Type 4 - Rotating wind-driven roof ventilator		
Ventilator Performance Class (AS/NZS 4740:2000 Table 1.2)			
Rain Resistance	50 m/s No Water - Class A	50 m/s No Water - Class A	50 m/s No Water - Class A
Effective Aerodynamic Area, EAA	0.109 m^2	0.128 m^2	0.139 m^2
Effective Aerodynamic Area, C_d	0.77 - Class 1	0.73 - Class 1	0.54 - Class 2
Flow Coefficient, C_f	0.22 - Class 4	0.22 - Class 4	0.18 - Class 4
Wind Loading	57m/s - Level 1	57m/s - Level 1	57m/s - Level 1
Nominal Performance* (m^3/hr)			
0 m/s	933 m^3/hr	1090 m^3/hr	1189 m^3/hr
3 m/s	969 m^3/hr	1132 m^3/hr	1220 m^3/hr
6 m/s	1068 m^3/hr	1248 m^3/hr	1307 m^3/hr

*In accordance to AS/NZS 4740:2000 nominal performance parameters, as per cl3.5 at h = 6m, $\Delta T = 14^oC$, $T = 20^o$

PERFORMANCE

Natural wind ventilators must be manufactured in Australia and in an ISO 9001 certified factory. They must:

- Be tested in accordance to the Australian and New Zealand standard AS/NZS 4740:2000 Performance of Natural Ventilation.
- Have the tested capability of withstanding wind speed of 205.2km/hr.

FINISHES

Available in a mill or a range of powder coat colours upon request

ACCESSORIES

When specified, accessories such as manual damper, electric damper, EC damper grilles, and special bases (spigot, square to round and EX Base) are available upon request.

WARRANTIES

CSR Building Products Limited ABN 55 008 631 356 T/A Edmonds ("Edmonds") warrants from the date of install, for a period of FIFTEEN (15) YEARS that the Edmonds Hurricane® Natural Ventilator turbine and body will retain its performance characteristics and be free from faulty materials and workmanship on the condition that the vent is installed in accordance to the installation instructions. Please refer to Warranty Document on edmonds.com.au for full details.

EXPLODED VIEW

Model H700 - H800

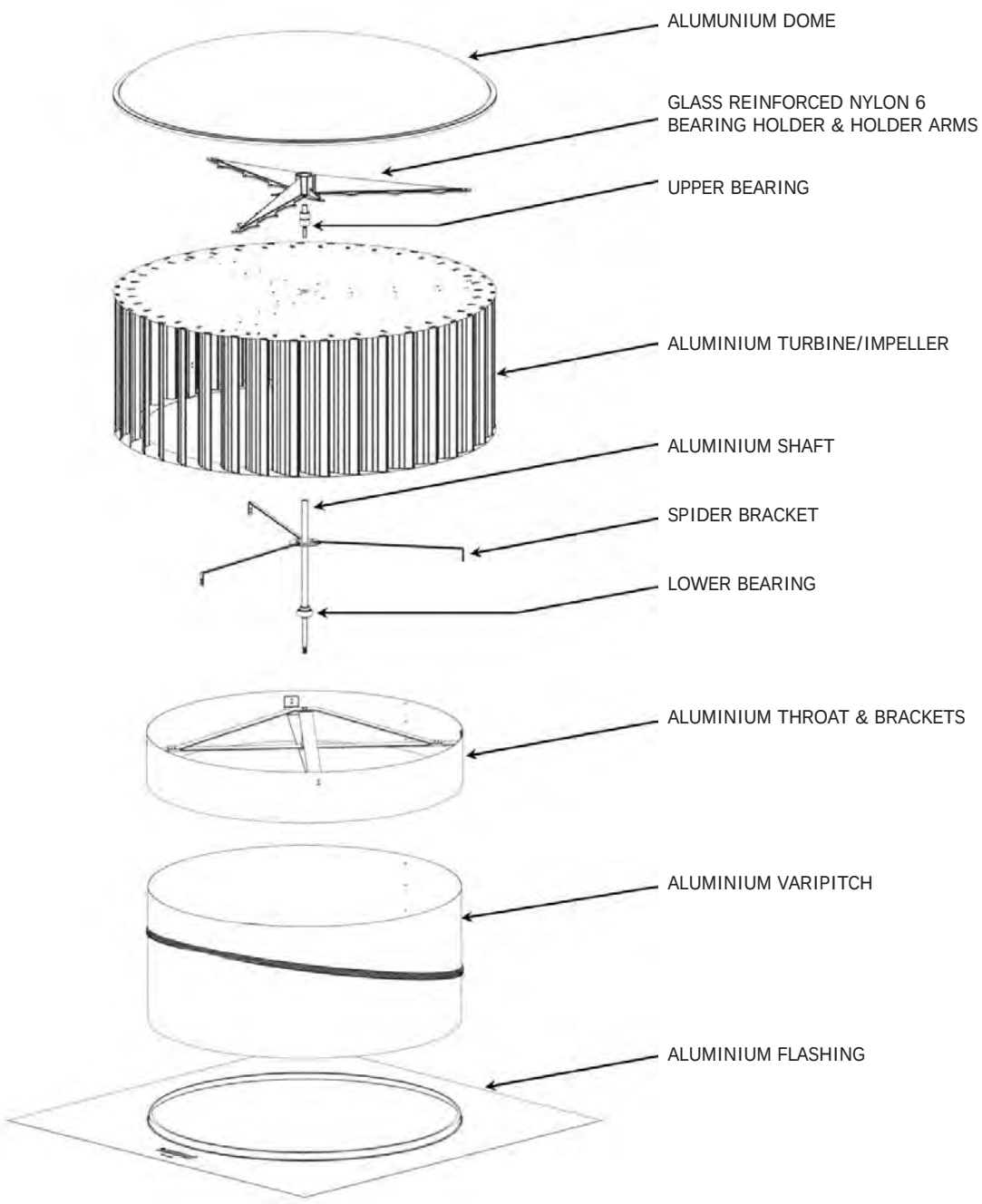

PRODUCT DIMENSION & WEIGHT

Model H700 - H800

Turbine, Varipitch and Flashing[1]

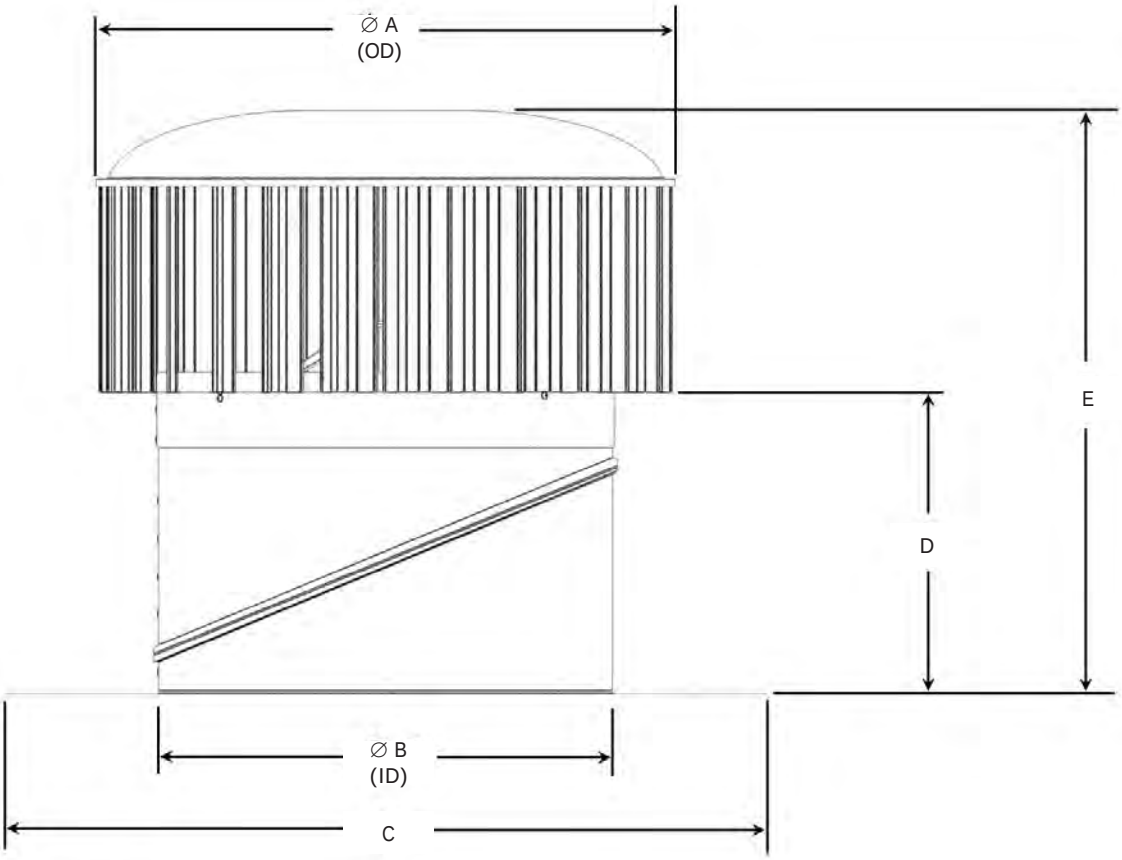

A : Overall turbine diameter B : Internal diameter of flashing opening C: Flashing Overall
D : Clearance flashing to turbine E : Overall Height

In Metric Units

Model	Dimensions*(mm)					Weight	Roof Slope Range
	∅A	∅B	C	D	E	kg	
H700	876	695	1000 x 1000	371	796	15.80	0° - 22.5°
H800	1003	792	1200 x 1200	393	848	20.60	0° - 22.5°

* Tolerance is within +/- 5mm and +/- 0.5kgs

In Imperal Units

Model	Dimensions#(inches)					Weight	Roof Slop Range
	∅A	∅B	C	D	E	lb	
H700	34.5	27.36	39.4 x 39.5	14.6	31.3	34.83	0° - 22.5°
H800	39.5	31.18	47.2 x 47.2	15.5	33.4	45.42	0° - 22.5°

Tolerance is within +/- 0.2 inches and +/- 1.1lbs

[1] The Hurricane throat overlaps the Varipitch. The height listed above is with the maximum overlap (lowest overall height). Revolving the Varipitch to suit a roof slope also reduces the complete ventilator's overall height.

National Export Award for Edmonds Business

Quality Management standard for Edmonds Seven Hills facility

CONFIGURABLE PRODUCT | WATER INGRESS PROTECTED | SUITABLE FOR HIGH WINDSPEED | DESIGNED

PRODUCT DIMENSION & WEIGHT

Model H700 - H800

Turbine

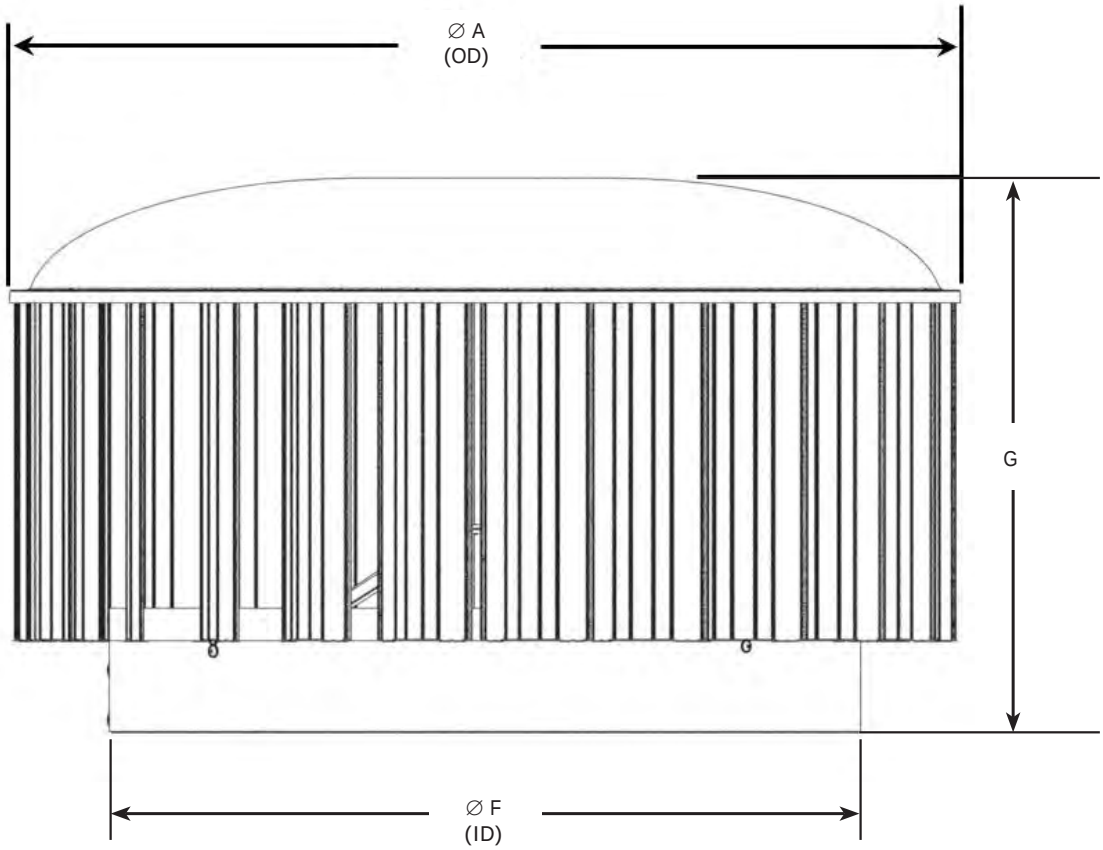

A : Overall turbine diameter F : Effective inner throat opening area G: Overall turbine only height

In Metric Units

Model	Dimensions* (mm)			Weight
	ØA	ØF	G	kg
H700	876	705	556	11.60
H800	1003	799	590	14.90

* Tolerance is within +/- 5mm and +/- 0.5kgs

In Imperal Units

Model	Dimensions# (inches)			Weight
	ØA	ØF	G	lb
H700	34.5	27.8	21.9	25.57
H800	39.5	31.5	23.2	32.85

Tolerance is within +/- 0.2 inches and +/- 1.1lbs

PRODUCT CLASSIFICATION AND PERFORMANCE

Model H700 - H800

PRODUCT INFORMATION SUMMARY

Ventilator Range	Hurricane®	
Ventilator Model	H700	H800
Ventilator Type	Type 4 - Rotating wind-driven roof ventilator	
Ventilator Performance Class (AS/NZS 4740:2000 Table 1.2)		
Rain Resistance	50 m/s No Water - Class A	50 m/s No Water - Class A
Effective Aerodynamic Area, EAA	0.193 m^2	0.298 m^2
Effective Aerodynamic Area, C_d	0.54 - Class 2	0.64 - Class 2
Flow Coefficient, C_f	0.12 - Class 4	0.16 - Class 4
Wind Loading	57m/s - Level 1	57m/s - Level 1
Nominal Performance* (m^3/hr)		
0 m/s	1650 m^3/hr	2546 m^3/hr
3 m/s	1669 m^3/hr	2597 m^3/hr
6 m/s	1068 m^3/hr	2746 m^3/hr

*In accordance to AS/NZS 4740:2000 nominal performance parameters, as per cl3.5 at h = 6m, $\Delta T = 14^oC$, $T = 20^o$

PERFORMANCE

Natural wind ventilators must be manufactured in Australia and in an ISO 9001 certified factory. They must:

- Be tested in accordance to the Australian and New Zealand standard AS/NZS 4740:2000 Performance of Natural Ventilation.
- Have the tested capability of withstanding wind speed of 205.2km/hr.

FINISHES

Available in a mill or a range of powder coat colours upon request

ACCESSORIES

When specified, accessories such as manual damper, electric damper, EC damper grilles, and special bases (spigot, square to round and EX Base) are available upon request.

WARRANTIES

CSR Building Products Limited ABN 55 008 631 356 T/A Edmonds ("Edmonds") warrants from the date of install, for a period of FIFTEEN (15) YEARS that the Edmonds Hurricane® Natural Ventilator turbine and body will retain its performance characteristics and be free from faulty materials and workmanship on the condition that the vent is installed in accordance to the installation instructions. Please refer to Warranty Document on edmonds.com.au for full details.

EXPLODED VIEW

Model H900

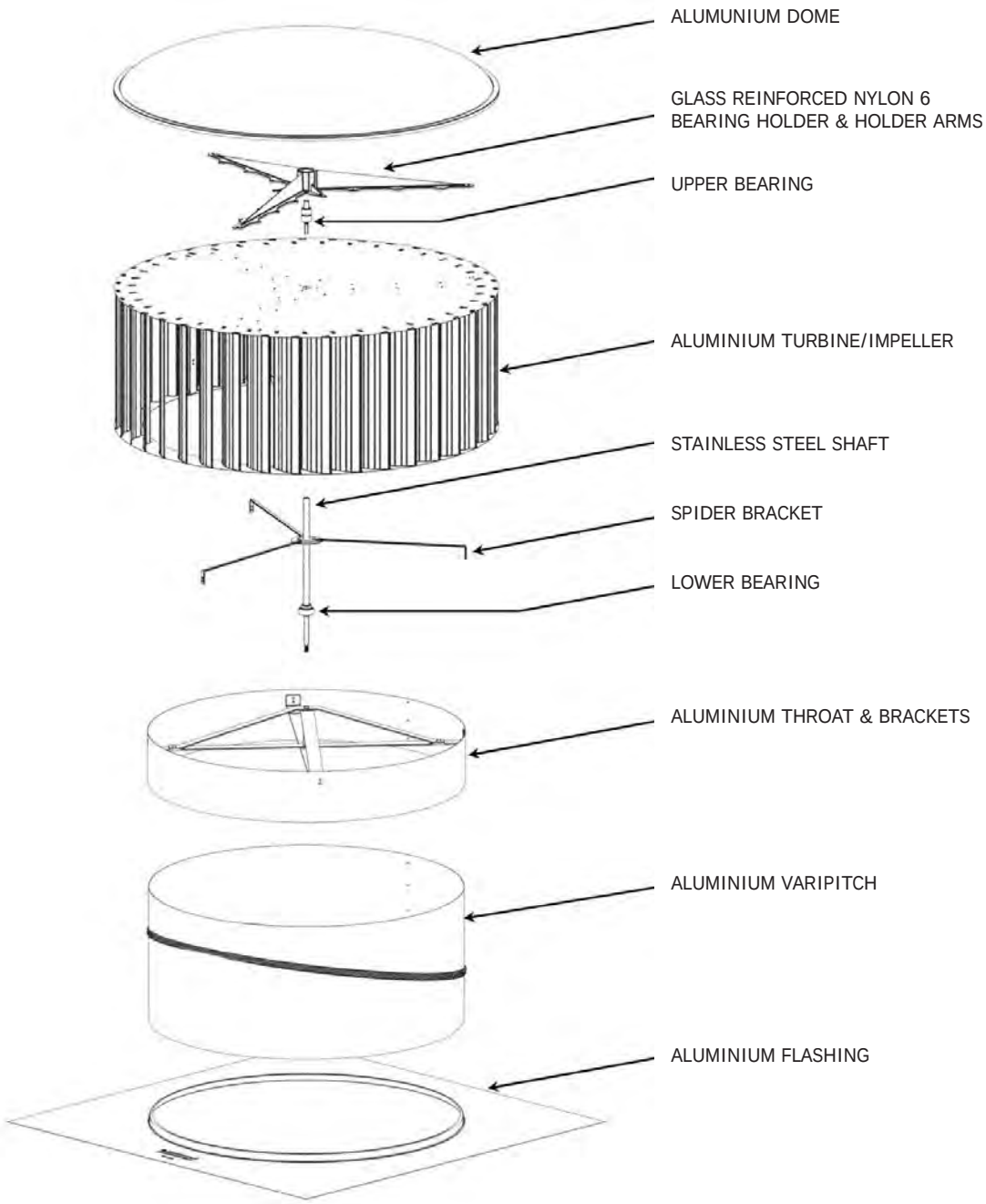

PRODUCT DIMENSION & WEIGHT

Model H900

Turbine, Varipitch and Flashing[1]

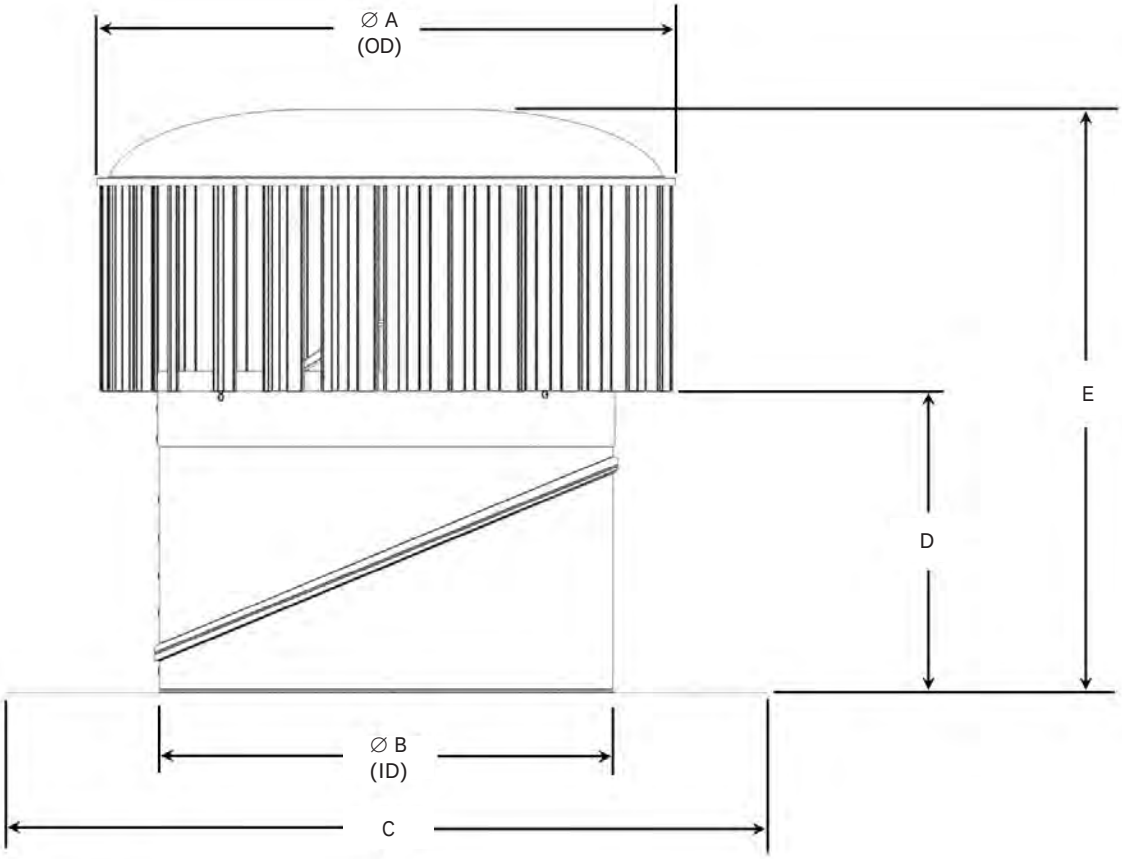

A : Overall turbine diameter B : Internal diameter of flashing opening C: Flashing Overall
D : Clearance flashing to turbine E : Overall Height

In Metric Units

Model	Dimensions*(mm)					Weight	Roof Slope Range
	ØA	ØB	C	D	E	kg	
H900	1096	891	1200 x 1200	421	936	24.10	0° - 22.5°

* Tolerance is within +/- 5mm and +/- 0.5kgs

In Imperal Units

Model	Dimensions#(inches)					Weight	Roof Slop Range
	ØA	ØB	C	D	E	lb	
H900	43.1	35.08	47.2 x 47.2	16.6	36.9	53.13	0° - 22.5°

Tolerance is within +/- 0.2 inches and +/- 1.1lbs

[1] The Hurricane throat overlaps the Varipitch. The height listed above is with the maximum overlap (lowest overall height). Revolving the Varipitch to suit a roof slope also reduces the complete ventilator's overall height.

PRODUCT DIMENSION & WEIGHT

Model H900

Turbine

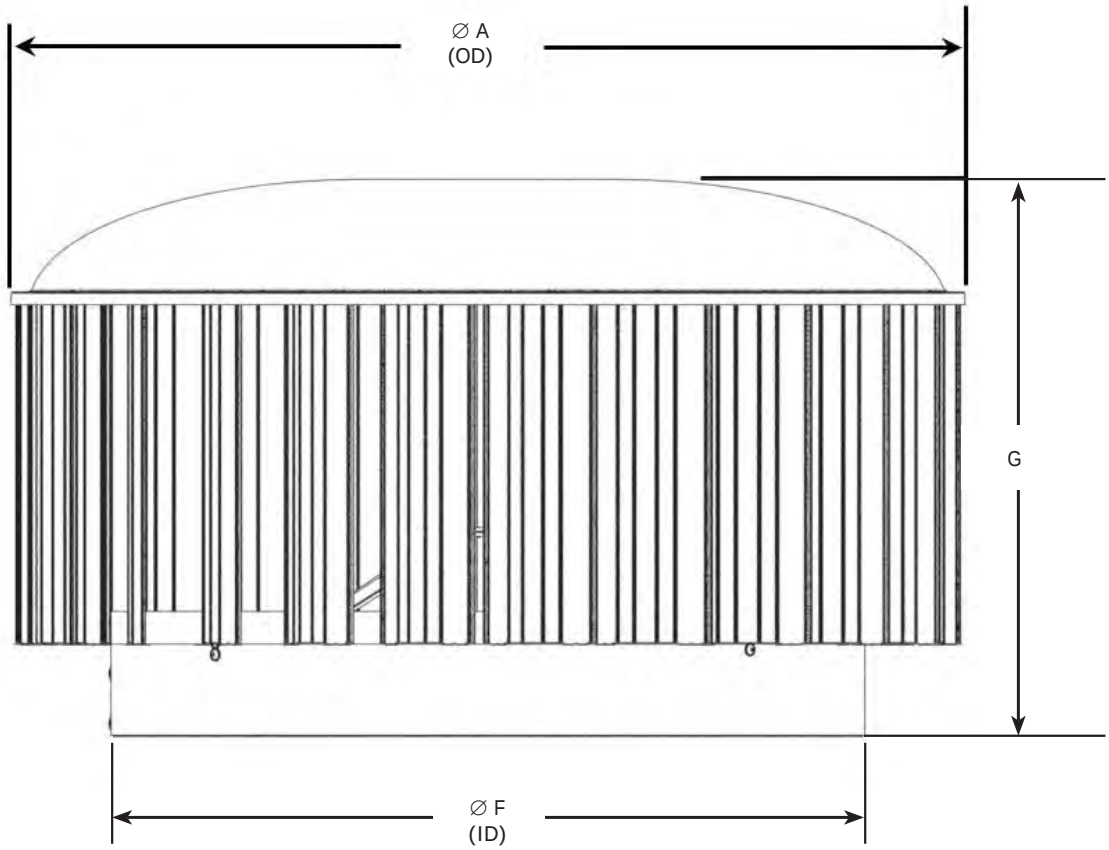

A : Overall turbine diameter F : Effective inner throat opening area G: Overall turbine only height

In Metric Units

Model	Dimensions* (mm)			Weight
	ØA	ØF	G	kg
H900	1096	897	643	18.10

* Tolerance is within +/- 5mm and +/- 0.5kgs

In Imperal Units

Model	Dimensions# (inches)			Weight
	ØA	ØF	G	lb
H900	43.1	35.3	25.3	39.90

Tolerance is within +/- 0.2 inches and +/- 1.1lbs

PRODUCT CLASSIFICATION AND PERFORMANCE

Model H900

PRODUCT INFORMATION SUMMARY

Ventilator Range	Hurricane®
Ventilator Model	H900
Ventilator Type	Type 4 - Rotating wind-driven roof ventilator
Ventilator Performance Class (AS/NZS 4740:2000 Table 1.2)	
Rain Resistance	50 m/s No Water - Class A
Effective Aerodynamic Area, EAA	0.374 m^2
Effective Aerodynamic Area, C_d	0.63 - Class 2
Flow Coefficient, C_f	0.17 - Class 4
Wind Loading	57m/s - Level 1
Nominal Performance* (m^3/hr)	
0 m/s	3194 m^3/hr
3 m/s	3267 m^3/hr
6 m/s	3477 m^3/hr

*In accordance to AS/NZS 4740:2000 nominal performance parameters, as per cl3.5 at h = 6m, $\Delta T = 14^oC$, $T = 20^o$

PERFORMANCE

Natural wind ventilators must be manufactured in Australia and in an ISO 9001 certified factory. They must:

- Be tested in accordance to the Australian and New Zealand standard AS/NZS 4740:2000 Performance of Natural Ventilation.
- Have the tested capability of withstanding wind speed of 205.2km/hr.

FINISHES

Available in a mill or a range of powder coat colours upon request

ACCESSORIES

When specified, accessories such as manual damper, electric damper, EC damper grilles, and special bases (spigot, square to round and EX Base) are available upon request.

WARRANTIES

CSR Building Products Limited ABN 55 008 631 356 T/A Edmonds ("Edmonds") warrants from the date of install, for a period of FIFTEEN (15) YEARS that the Edmonds Hurricane® Natural Ventilator turbine and body will retain its performance characteristics and be free from faulty materials and workmanship on the condition that the vent is installed in accordance to the installation instructions. Please refer to Warranty Document on edmonds.com.au for full details.